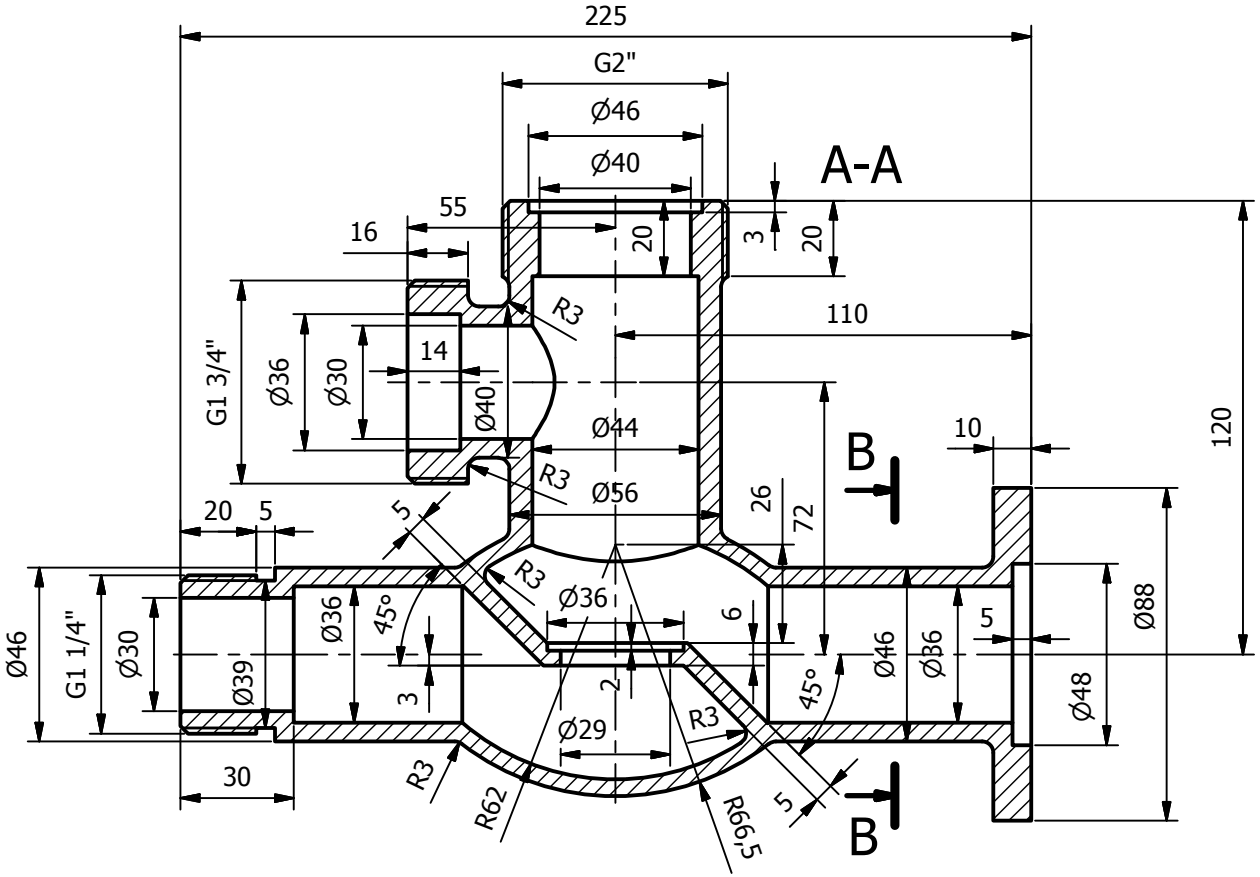

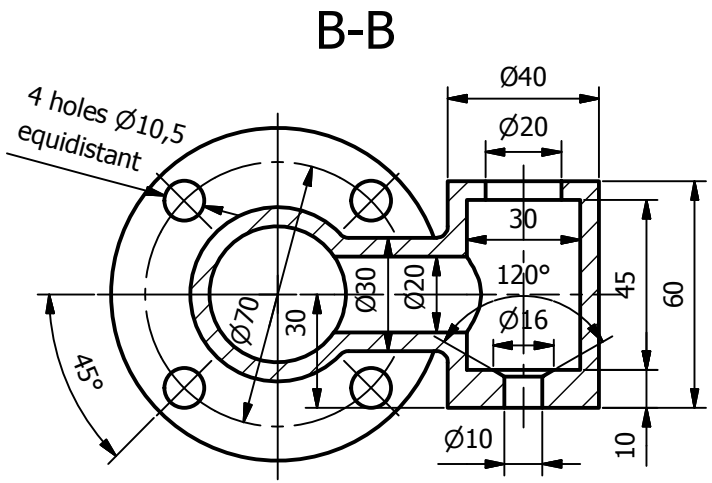

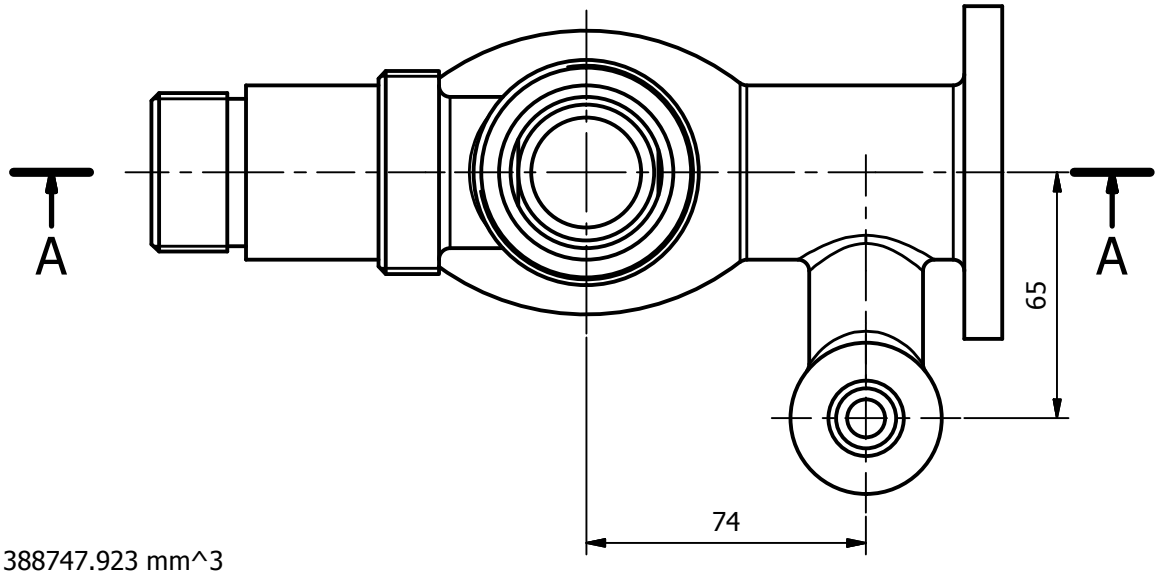

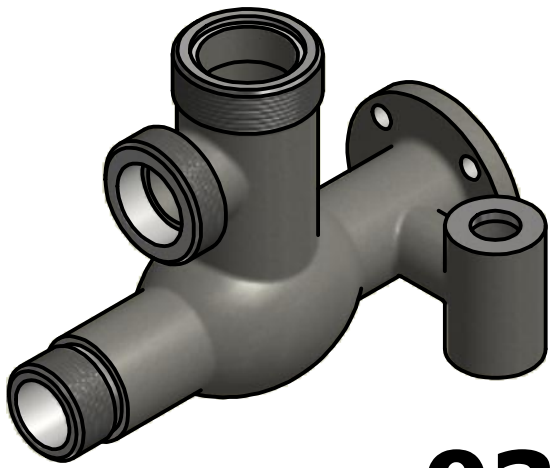

388747.923 mm^3